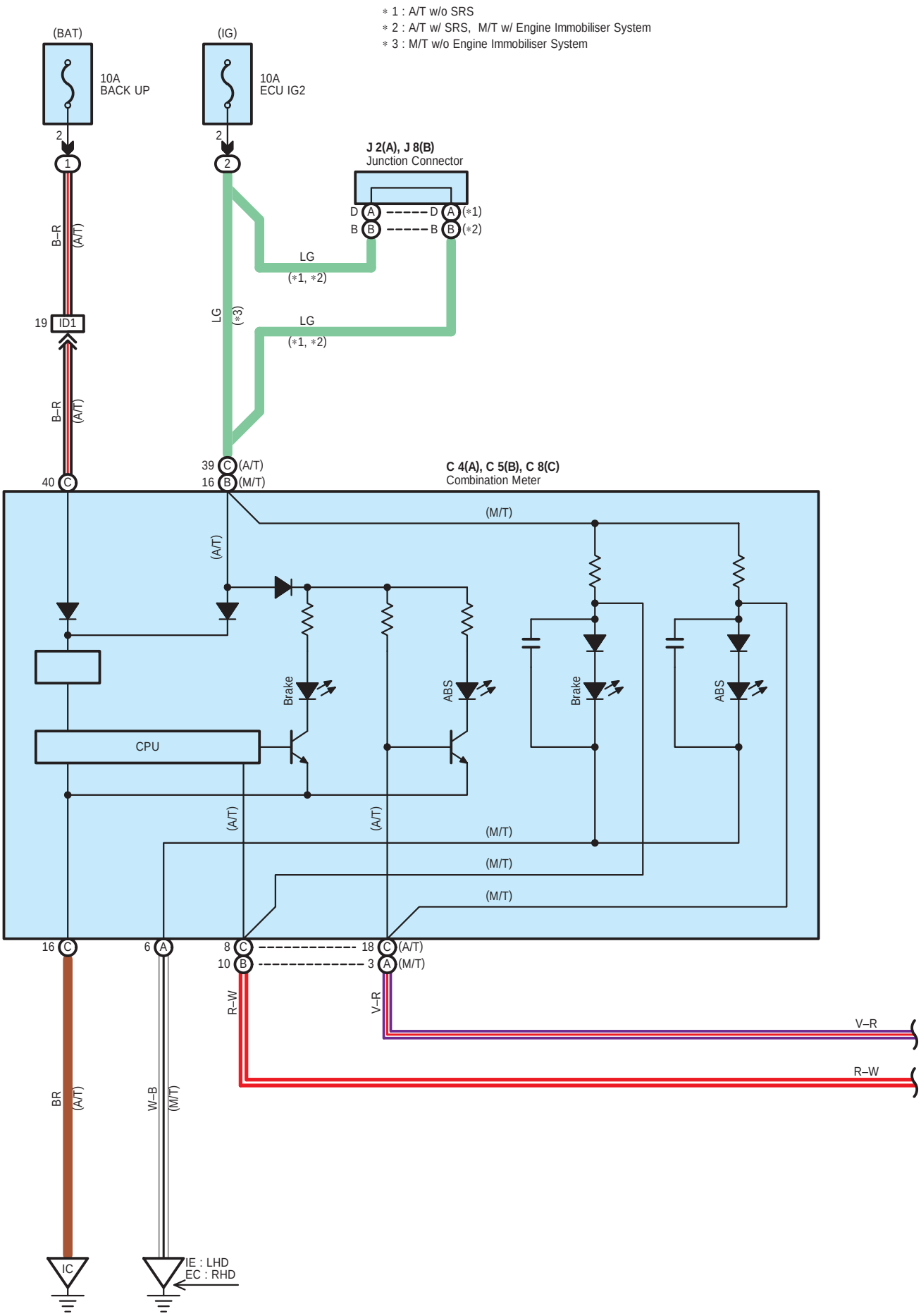
∗ 1 : A/T w/o SRS
∗ 2 : A/T w/ SRS, M/T w/ Engine Immobiliser System
∗ 3 : M/T w/o Engine Immobiliser System
(BAT)
10A
BACK UP
(IG)
10A
ECU IG2
J 2(A), J 8(B)
Junction Connector
D A
B B
D A (∗1)
B B (∗2)
LG
(∗1, ∗2)
LG
(∗3)
LG
(∗1, ∗2)
B–R
(A/T)
19 ID1
B–R
(A/T)
39 C (A/T)
16 B (M/T)
40 C
C 4(A), C 5(B), C 8(C)
Combination Meter
(M/T)
(A/T)
Brake
ABS
Brake
ABS
CPU
(A/T)
(A/T)
(M/T)
(M/T)
(M/T)
16 C
6 A
8 C
10 B
18 C (A/T)
3 A (M/T)
R–W
V–R
V–R
R–W
BR
(A/T)
W–B
(M/T)
IC
IE : LHD
EC : RHD

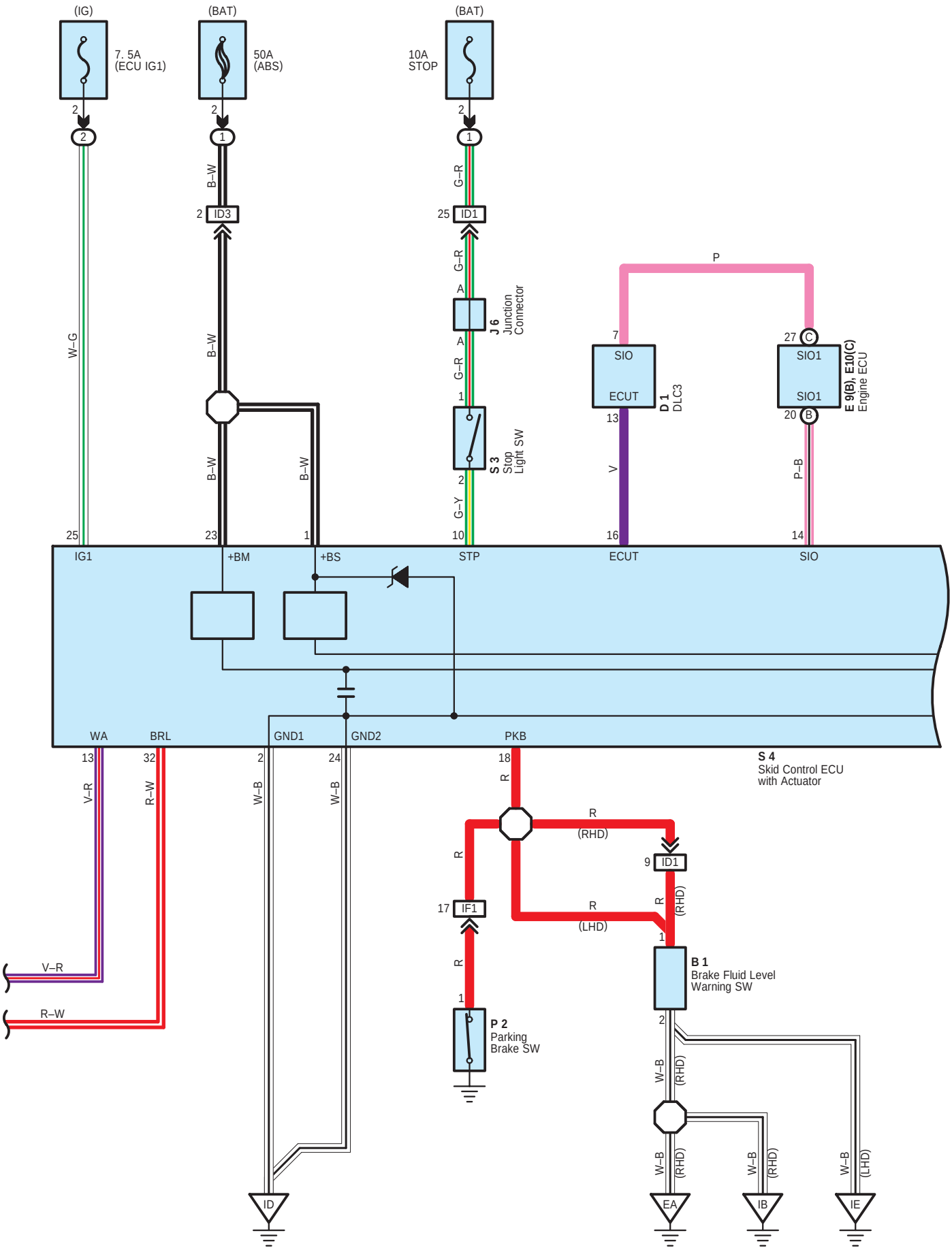
(IG)
7. 5A
(ECU IG1)
(BAT)
50A
(ABS)
(BAT)
10A
STOP
ID3
ID1
J 6
Junction
Connector
S 3
Stop
Light SW
D 1
DLC3
SIO
ECUT
SIO1
SIO1
E 9(B), E10(C)
Engine ECU
IG1
+BM
+BS
STP
ECUT
SIO
WA
BRL
GND1
GND2
PKB
S 4
Skid Control ECU
with Actuator
IF1
P 2
Parking
Brake SW
ID1
B 1
Brake Fluid Level
Warning SW
ID
EA
IB
IE

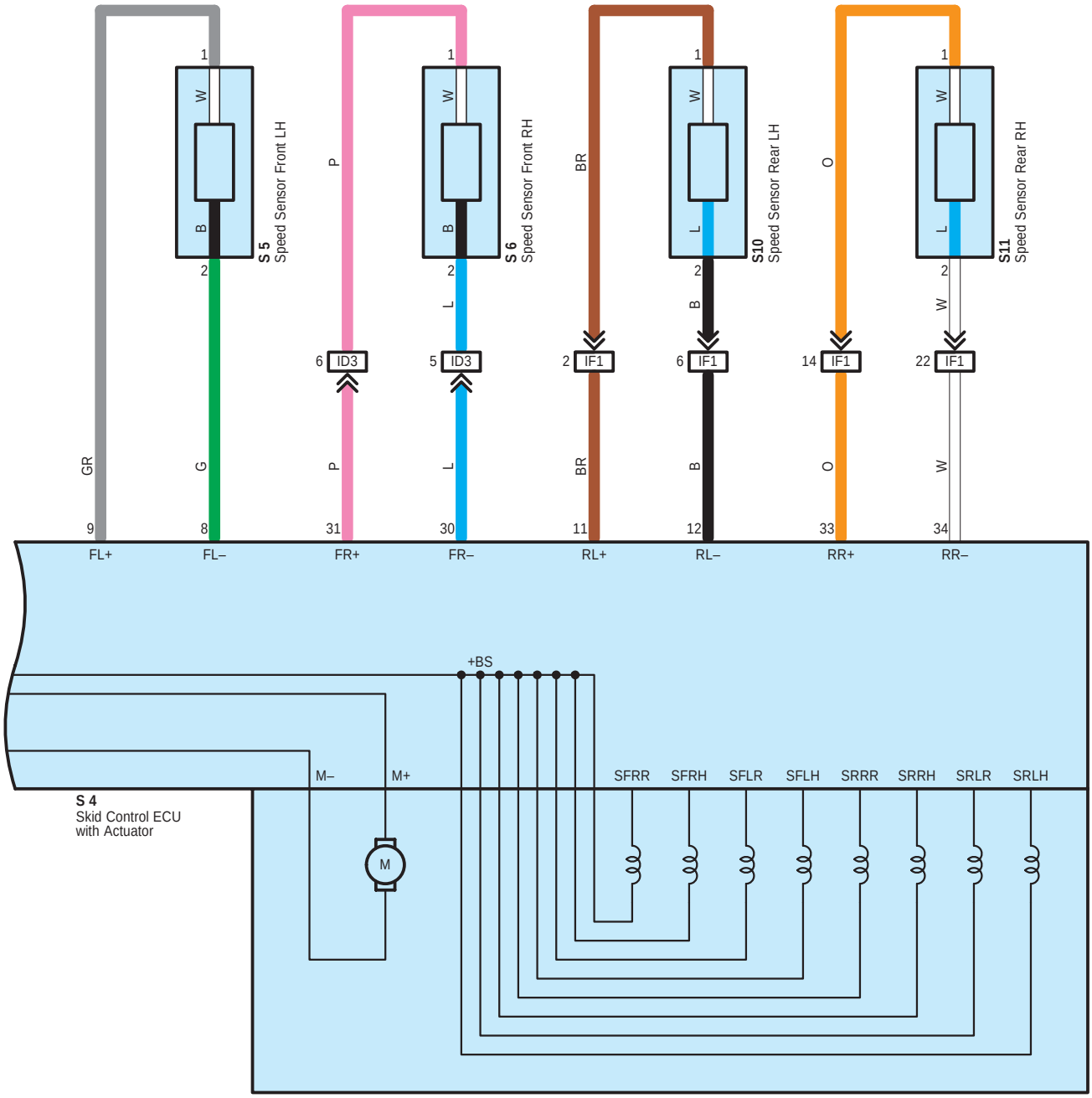
S 5
Speed Sensor Front LH
S 6
Speed Sensor Front RH
S10
Speed Sensor Rear LH
S11
Speed Sensor Rear RH
ID3
IF1
GR
G
P
L
BR
B
O
W
FL+
FL–
FR+
FR–
RL+
RL–
RR+
RR–
+BS
M–
M+
SFRR
SFRH
SFLR
SFLH
SRRR
SRRH
SRLR
SRLH
S 4
Skid Control ECU
with Actuator
M

System Outline

This system controls the respective brake fluid pressures acting on the brake cylinders of the right front wheel, left front wheel, and rear wheels when the brakes are applied in a panic stop so that the wheels do not lock.
This results in improved directional stability and steerability during panic braking.

1. Input Signal

(1) Speed sensor signal

The speed of the wheels is detected and input to TERMINALS FL+, FR+, RL+ and RR+ of the skid control ECU with actuator.

(2) Stop lamp SW signal

A signal is input to TERMINAL STP of the skid control ECU with actuator when the brake pedal is depressed.

2. System Operation

During sudden braking, the skid control ECU with actuator which has signals input from each sensor lets the hydraulic pressure acting on each wheel cylinder escape to the reservoir.
The pump inside the skid control ECU with actuator is also operating at this time and it returns the brake fluid from the reservoir to the master cylinder, thus preventing locking of vehicle wheels.
If the skid control ECU with actuator judges that the hydraulic pressure acting on the wheel cylinder is insufficient, the current acting on the solenoid is controlled and the hydraulic pressure is increased.
Holding of the hydraulic pressure is also controlled by the ECU, by the same method as above, by repeated pressure reduction. Holding and increase are repeated to maintain vehicle stability and to improve steerability during sudden braking.

: Parts Location

Code		See Page	Code		See Page	Code	See Page
B1		24 (*1)	E9	B	36 (*5)	S3	39 (*6)
		32 (*3)			38 (*6)	S4	25 (*1)
		34 (*4)	E10	C	28 (LHD)		33 (*3)
C4	A	28 (LHD)			36 (*5)		35 (*4)
		36 (*5)			38 (*6)	S5	25 (*1)
		38 (*6)	J2	A	39 (*6)		33 (*3)
C5	B	28 (LHD)	J6		29 (LHD)		35 (*4)
		36 (*5)			37 (*5)	S6	25 (*1)
		38 (*6)			39 (*6)		33 (*3)
C8	C	28 (LHD)	J8	B	29 (LHD)		35 (*4)
		38 (*6)			37 (*5)	S10	31 (LHD)
D1		28 (LHD)	P2		31 (LHD)		41 (RHD)
		36 (*5)			41 (RHD)	S11	31 (LHD)
		38 (*6)	S3		29 (LHD)		41 (RHD)
E9	B	28 (LHD)			37 (*5)		

: Relay Blocks

Code	See Page	Relay Blocks (Relay Block Location)
1	22	Engine Room R/B (Engine Compartment Right)
2	23 (LHD)	Fuse Block (Left Kick Panel)
	23 (RHD)	Fuse Block (Right Kick Panel)

* 1 : LHD 3SZ–VE * 2 : LHD K3–VE * 3 : RHD 3SZ–VE * 4 : RHD K3–VE * 5 : RHD w/ Heater * 6 : RHD w/o Heater

: Connector Joining Wire Harness and Wire Harness

Code	See Page	Joining Wire Harness and Wire Harness (Connector Location)
ID1	44 (LHD)	Engine Room Main Wire and Instrument Panel Wire (Right Kick Panel)
	48 (*5)	Engine Room Main Wire and Instrument Panel Wire (Cowl Side Panel RH)
	49 (*6)	
ID3	44 (LHD)	Engine Room Main Wire and Instrument Panel Wire (Right Kick Panel)
	48 (*5)	Engine Room Main Wire and Instrument Panel Wire (Cowl Side Panel RH)
	49 (*6)	
IF1	44 (LHD)	Instrument Panel Wire and Floor Wire (Left Kick Panel)
	48 (*5)	Instrument Panel Wire and Floor Wire (Right Kick Panel)
	49 (*6)	

: Ground Points

Code	See Page	Ground Points Location
EA	46 (*3)	Right Fender Apron
	47 (*4)	
EC	46 (*3)	Left Fender Apron
	47 (*4)	
IB	48 (*5)	Cowl Side Panel RH
	49 (*6)	
IC	44 (LHD)	Cowl Side Panel LH
	49 (*6)	Right Kick Panel
ID	44 (LHD)	Left Kick Panel
	48 (*5)	
	49 (*6)	
IE	44 (LHD)	Cowl Side Panel LH

* 1 : LHD 3SZ–VE * 2 : LHD K3–VE * 3 : RHD 3SZ–VE * 4 : RHD K3–VE * 5 : RHD w/ Heater * 6 : RHD w/o Heater